Daiwa
COMMITTED TO TOTAL QUALITY

Please order by part number, not key number.

SPINNING REEL REGAL RG-Z1500BL/RG-Z2000BL

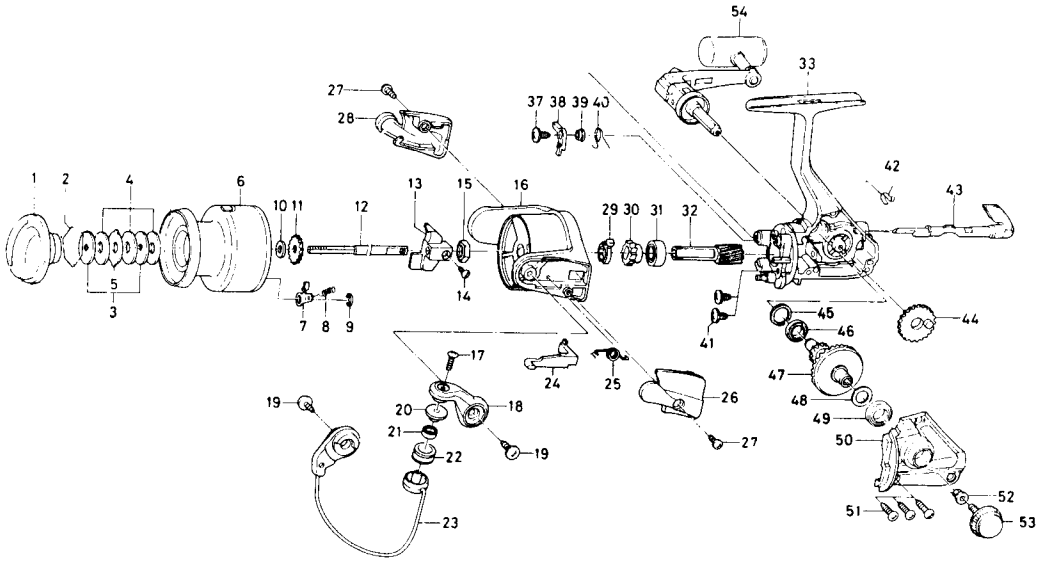

Key No.	Parts No.	Parts Name
2-9	F33-0603	Spool assembly
1	F32-8503	Drag knob
2	F37-3301	Drag washer retainer
3	E46-7201	Key washer
4	E13-6001	Drag washer
5	373-3603	Eared washer
6	F33-0703	Spool assembly
7	B07-5304	Click pawl
8	E40-3101	Click spring
9	320-5901	Click retainer
10	E46-7101	Spool washer
11	270-6501	Click gear
12	E49-8401	Main shaft
13	F12-2301	Oscillating slider
14	351-0311	Oscillating slider screw
15	341-9201	Rotor nut
16	F32-7803	Rotor
17	B67-9306	Line roller screw
18	F32-3003	Bail arm
19	B84-2102	Bail arm screw
20	F06-6301	Line roller collar
21	F05-5601	Ball bearing A
22	F05-8901	Line roller
23	F33-1101	Bail assembly
24	E49-6401	Bail trip lever
25	E49-6801	Bail spring
26	F32-4203	Bail spring cover
27	E24-8101	Bail spring cover screw
28	F32-6303	Bail-trip cover
29	F12-2101	Anti-reverse pawl spring A
30	F32-7701	Anti-reverse ratchet
31	634-1301	Ball bearing B

Key No.	Parts No.	Parts Name
32	F12-1601	Pinion gear
33	F33-1301	Body assembly
37	F12-5701	Anti-reverse pawl screw
38	F12-1901	Anti-reverse pawl
39	F12-3501	Anti-reverse pawl collar
40	F12-3401	Anti-reverse pawl spring B
41	E03-7801	Bearing retainer screw
42	F12-2001	Anti-reverse cam spring
43	F08-5123	Anti-reverse lever
44	F12-2201	Oscillating gear
45	E50-5801	Bearing washer
46	E30-6801	Ball bearing C
47	F12-1501	Drive gear
48	375-8501	Drive gear washer
49	634-1301	Ball bearing B
50	F33-1001	Side cover
51	E15-8602	Side cover screw
52	501-8501	Handle collar
53	B92-5006	Handle lock screw
54	F33-1201	Handle assembly
RG-Z2000BL	**Special Parts**	
2-9	F33-2303	Spool assembly
6	F33-2403	Spool assembly
16	F33-1803	Rotor
23	F33-2501	Bail assembly
24	E49-6501	Bail trip lever
33	F33-1303	Body assembly
50	F33-1003	Side cover