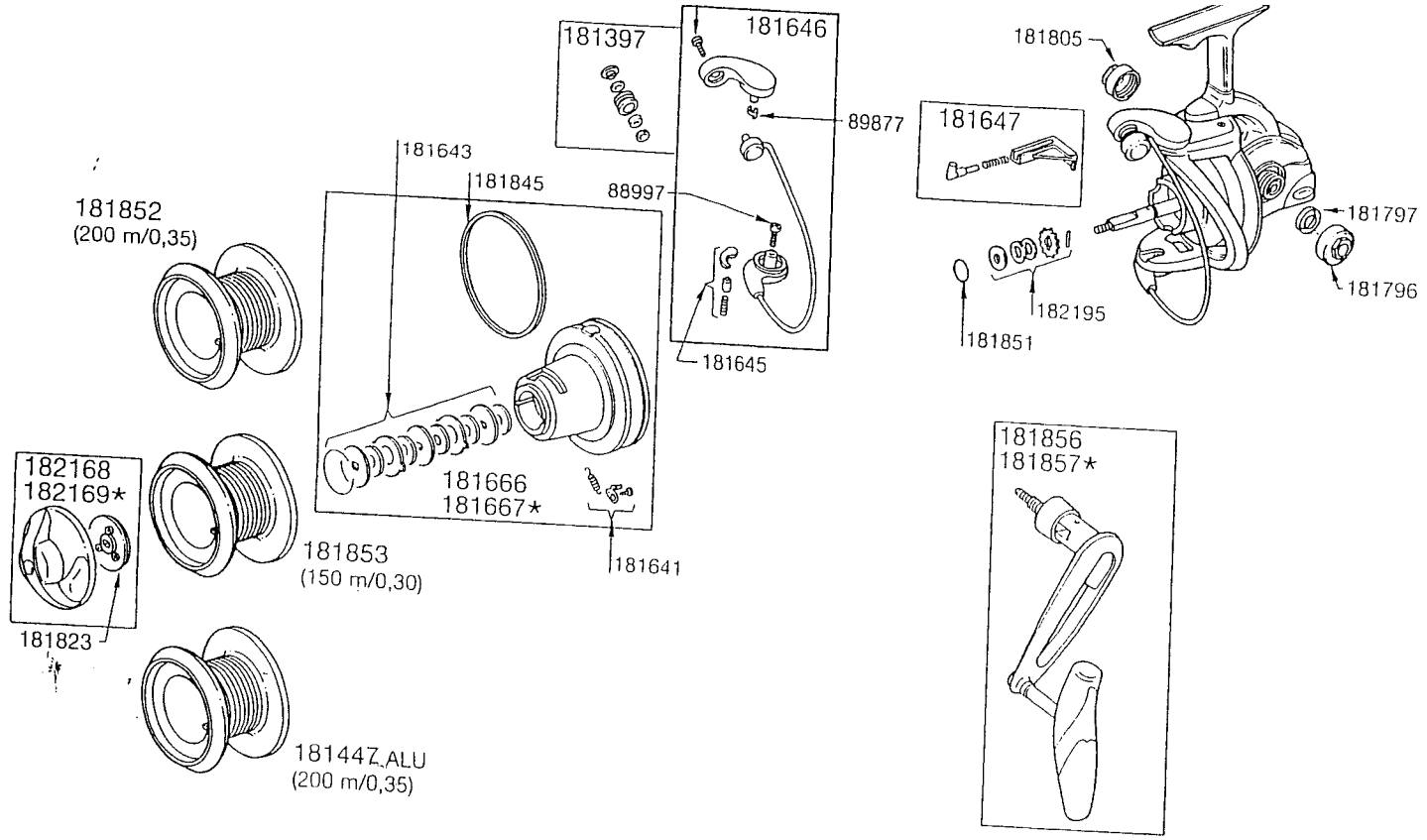

	ALUMINIUM			RÉCUPÉRATION/ *LINE RETRIEVE*	RATIO	POIDS/ *WEIGHT*
Capacité	Ø 0,35 / 200 M	Ø 0,35 / 200 M	Ø 0,30 / 150 M	NAUTIL 6500		
				0,75 M / 2'5.5"	4,57/1	450 G 15.9 OZ
Capacity	20 Lb / 220 Yds	20 Lb / 220 Yds	16 Lb / 165 Yds	NAUTIL 6500 GV		
				0,90 M / 2'11"	5,43/1	450 G 15.9 OZ